Cambridge Assessment International Education

Cambridge IGCSE™

CANDIDATE NAME	

CENTRE NUMBER						CANDIDATE NUMBER					

1428990771

BIOLOGY **0610/43**

Paper 4 Theory (Extended) **October/November 2020**

1 hour 15 minutes

You must answer on the question paper.

No additional materials are needed.

INSTRUCTIONS

- Answer **all** questions.
- Use a black or dark blue pen. You may use an HB pencil for any diagrams or graphs.
- Write your name, centre number and candidate number in the boxes at the top of the page.
- Write your answer to each question in the space provided.
- Do **not** use an erasable pen or correction fluid.
- Do **not** write on any bar codes.
- You may use a calculator.
- You should show all your working and use appropriate units.

INFORMATION

- The total mark for this paper is 80.
- The number of marks for each question or part question is shown in brackets [ ].

This document has **16** pages. Blank pages are indicated.

DC (JC/CT) 188259/4
© UCLES 2020

[Turn over

www.root19.com +91 - 9969 353 391

1 Plants are sensitive to light.

(a) Fig. 1.1 shows a sequence of diagrams for two young plant seedlings. The seedlings were first grown in pots with light from all directions and then placed into boxes.

- Seedling **A** was placed in a box with light entering from one side only.
- Seedling **B** was placed in a box with no light.

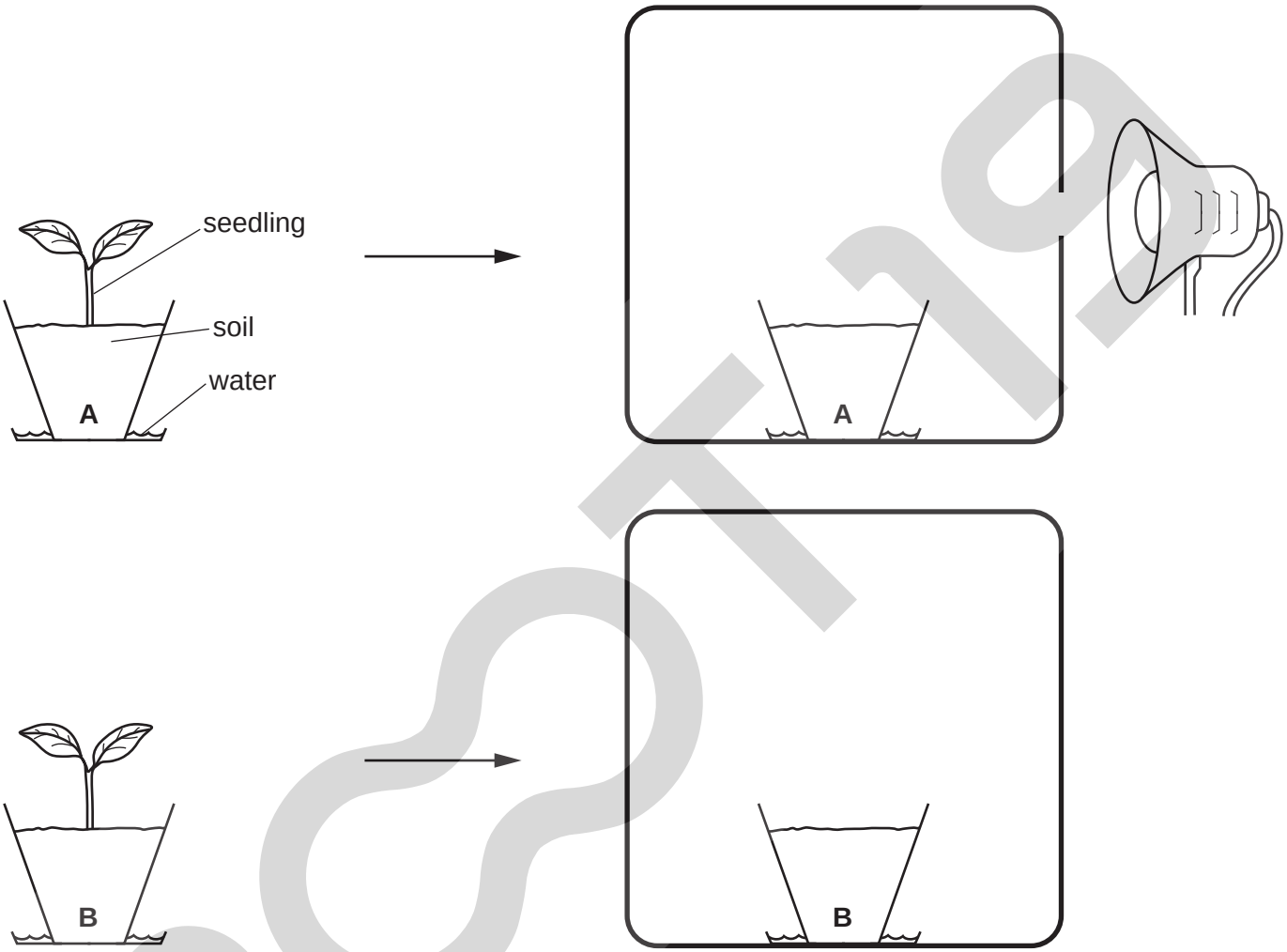

Fig. 1.1

Complete Fig. 1.1 by drawing seedling **A** and seedling **B**, **in the boxes**, to show the expected direction of their growth after one week. [2]

www.root19.com +91 - 9969 353 391

(b) Plants are also sensitive to gravity.

(i) Define the term *sensitivity*.

.....

.....

..... [2]

(ii) Explain the role of plant hormones in gravitropism.

.....

.....

.....

.....

.....

.....

.....

.....

..... [4]

(iii) Gravitropism enables plants to survive in their environment.

Explain how gravitropism enables a plant to survive.

.....

.....

.....

.....

..... [2]

© UCLES 2020
www.root19.com

+91 - 9969 353 301

(c) Reflexes in animals are also an example of sensitivity.

(i) Describe how reflexes in animals differ from sensitivity in plants.

.....

.....

.....

.....

..... [2]

(ii) The pupil reflex is an example of a reflex that occurs in the eye. The eye is a sense organ.

Define the term *sense organ*.

.....

.....

.....

.....

..... [2]

[Total: 14]

© UCLES 2020
www.root19.com

+91 - 9969 353 391

2 **(a)** A person ate a meal containing starch and fat.

Fig. 2.1 shows some events that occurred after ingesting this meal.

P	absorption of nutrients in the villi
Q	assimilation of fatty acids in the liver
R	breakdown of large food particles by the teeth
S	movement of small food particles through the oesophagus
T	secretion of amylase from the salivary glands

Fig. 2.1

Put the events in Fig. 2.1 into the correct sequence. One has been done for you.

R				

[2]

(b) The stomach lining contains cells that secrete proteins.

(i) State the names of **two** cell structures that are involved in making or secreting proteins.

1 .....

2 .....

[2]

(ii) State the name of **one** component of gastric juice **and** describe its functions.

.....

.....

.....

.....

.....

.....

.....

[3]

www.root19.com +91 - 9969 353 301

(iii) There are goblet cells in many parts of the alimentary canal.

State the substance that goblet cells secrete.

..... [1]

(c) Emulsification of fats occurs in the alimentary canal.

(i) Describe the process of emulsification of fats.

.....

.....

.....

.....

..... [2]

(ii) State the name of the organ in the alimentary canal where fats are emulsified.

..... [1]

(iii) State the name of the structure in the villi where digested fats are absorbed.

..... [1]

[Total: 12]

3 **(a)** Fig. 3.1 is part of a food web in a rainforest.

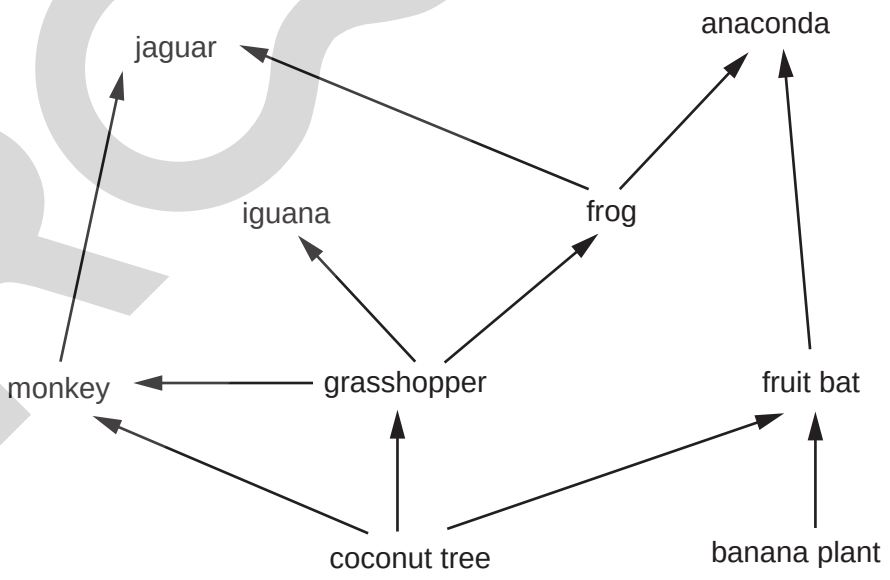

Fig. 3.1

www.root19.com +91 - 9969 353 391

(i) Complete Fig. 3.2 using the information in Fig. 3.1.

The first one has been done for you.

the number of different producers	2
the number of different secondary consumers	
the number of different trophic levels in the food web	
how many different trophic levels monkeys feed at	

Fig. 3.2

[3]

(ii) Sometimes anacondas are able to kill and eat jaguars.

Using the information in Fig. 3.1, state the name of the highest possible trophic level of an anaconda that eats a jaguar.

..... [1]

(iii) Explain why the population of anacondas is always smaller than the population of fruit bats in the food web shown in Fig. 3.1.

Use the concept of *energy flow* in your answer.

.....

.....

.....

.....

.....

.....

..... [3]

© UCLES 2020
www.root19.com

+91 - 9969 353 301

(b) **(i)** A giant rat was discovered in a natural rainforest on Vangunu Island. Scientists wanted to determine if it was a new species.

Explain how scientists can use tissue samples to classify this rat.

.....

.....

.....

.....

..... [2]

(ii) Giant rats eat coconuts.

Coconuts are grown as a monoculture for human consumption.

Suggest how monocultures of crop plants can result in the extinction of some animals.

.....

.....

.....

.....

.....

.....

..... [3]

[Total: 12]

© UCLES 2020
www.root19.com

+91 - 9969 353 391

4 Yeast is an example of a single-celled fungus.

(a) The population of yeast can be estimated by using a light microscope to view a small sample of yeast cells in a modified microscope slide.

There is a square chamber, with a specific volume, cut into the microscope slide and a grid to make it easier to count the number of cells.

Fig. 4.1 shows a diagram of the modified microscope slide. It also shows part of a light microscope with the modified microscope slide filled to the top with a sample of yeast cells.

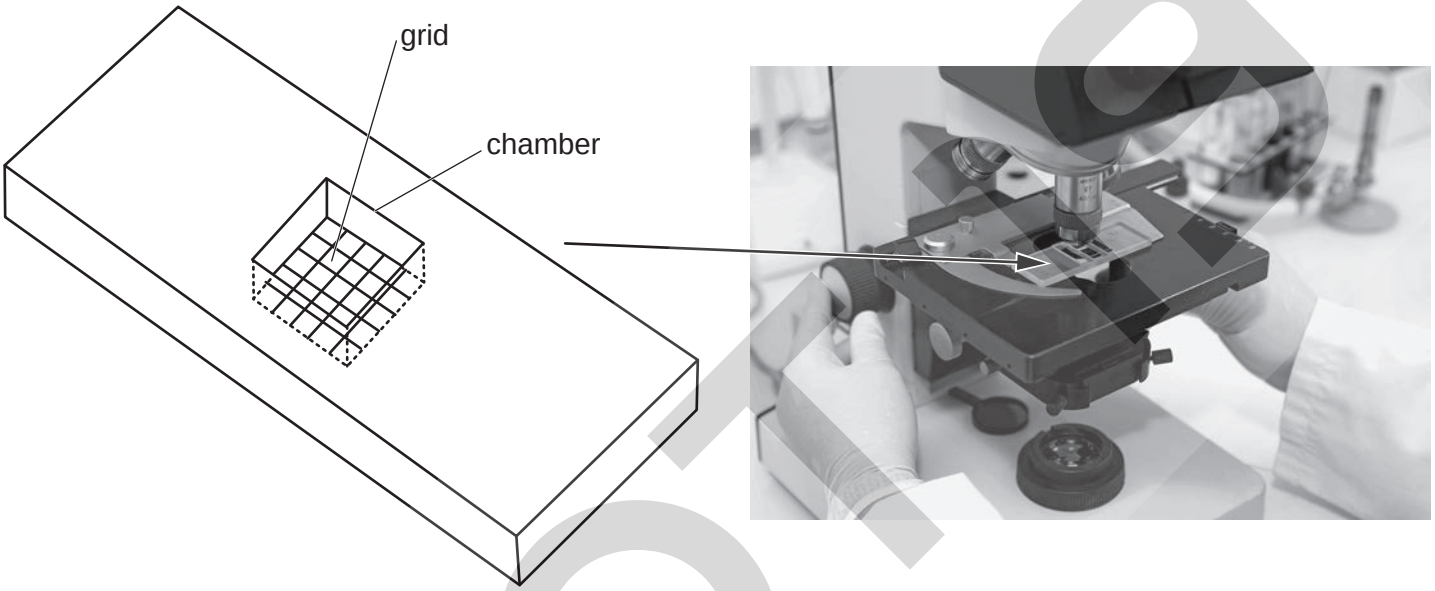

Fig. 4.1

The length of the sides of each small square in the grid in the modified microscope slide is 200 μm. The depth of the chamber is 100 μm. There is a total of 25 small squares in the grid.

Each small square in the grid has an average of 52 yeast cells.

Calculate the concentration of yeast cells per mm^3.

Space for working.

..... cells per mm^3
[3]

www.root19.com +91 - 9969 353 301

(b) A small sample of yeast cells and 19 g per dm^3 of sugar were added to a fermenter. The population size of live yeast cells and the concentration of the sugar in the fermenter were calculated every day for 10 days.

The results are shown in Fig. 4.2 and Fig. 4.3.

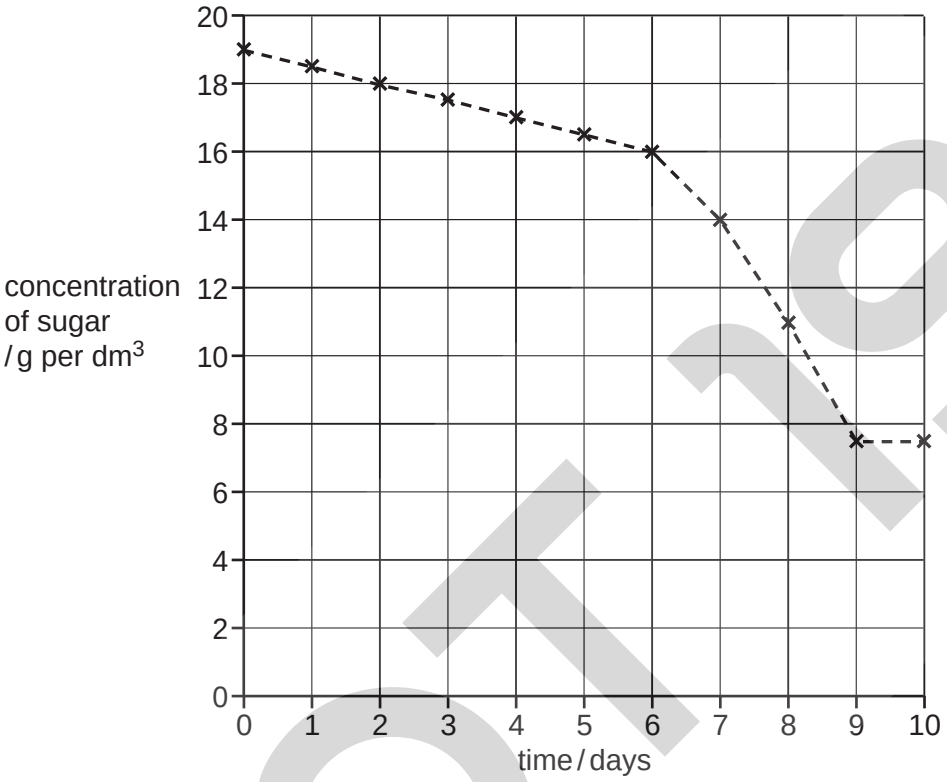

Fig. 4.2

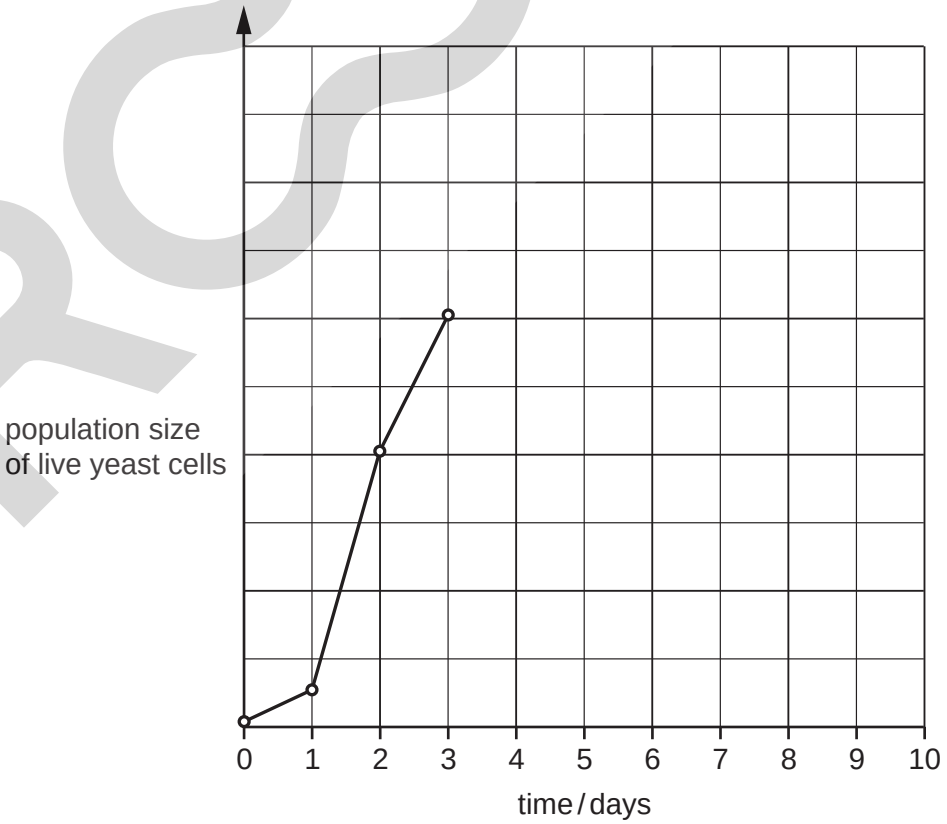

Fig. 4.3

www.root19.com +91 - 9969 353 391

(i) Draw an **X on Fig. 4.3** to indicate the position of the lag phase. [1]

(ii) Complete the line **on Fig. 4.3** to show the expected change in the population size of live yeast cells from day 3 to day 10. [2]

(iii) Describe **and** explain the changes in the concentration of sugar in the fermenter over the 10-day period.

.....

.....

.....

.....

.....

.....

.....

.....

.....

.....

..... [5]

(c) Explain why it is important that there is a tube in the fermenter that allows gases to escape.

.....

.....

.....

.....

..... [2]

[Total: 13]

root19

www.root19.com +91 - 9969 353 891

5 Fig. 5.1 shows a photomicrograph of a sperm cell reaching an egg cell.

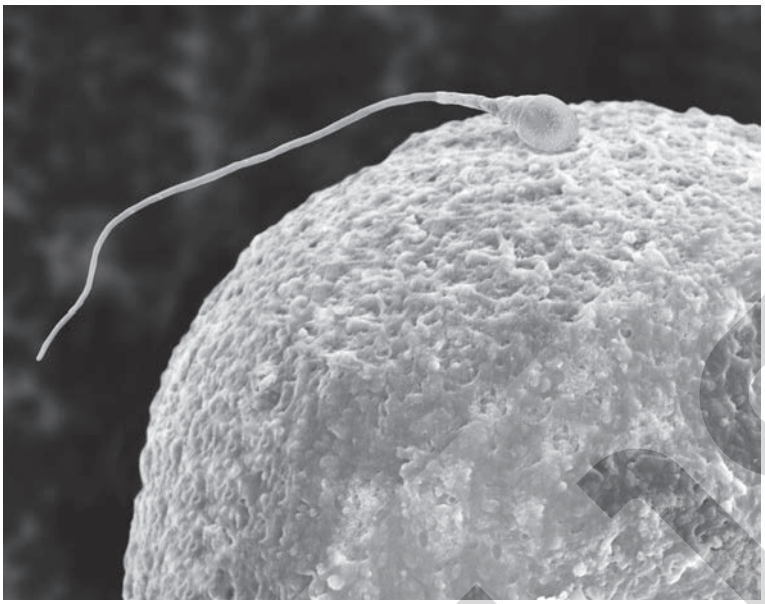

Fig. 5.1

(a) **(i)** Complete the sentence:

A nucleus containing a single set of unpaired chromosomes in a sperm is called a ..... nucleus. [1]

(ii) State where, in the female reproductive system, the event shown in Fig. 5.1 occurs.

..... [1]

(iii) Describe what happens from the event shown in Fig. 5.1 until an embryo is formed.

.....

.....

.....

.....

.....

.....

.....

.....

..... [4]

www.root19.com +91 - 9969 353 391

(b) Some people use fertility drugs and *in vitro* fertilisation (IVF) to have children.

Outline the use of fertility drugs and the process of IVF.

.....

.....

.....

.....

.....

.....

.....

.....

.....

.....

.....

.....

..... [6]

[Total: 12]

www.root19.com +91 - 9969 353 301

6 **(a)** Researchers investigated four different insecticides to determine how effective they were at removing three different species of insects, **A**, **B** and **C**, from crop plants.

They tested different concentrations of each insecticide to find the minimum dosage required to remove 95% of each insect population in two hours.

Each insecticide had the same cost per gram.

The results are shown in Table 6.1.

Table 6.1

species of insect	minimum dosage required / mg per dm^3			
	insecticide **1**	insecticide **2**	insecticide **3**	insecticide **4**
A	3	51	5	58
B	31	27	2	75
C	10	2	3	65

(i) Use the information in Table 6.1 to decide which **one** of the four different insecticides and which dosage would be the best choice for removing insects **A**, **B** and **C** from a field of crop plants.

Explain your choices.

insecticide ..... dosage .....

explanation .....

.....

.....

.....

.....

.....

[3]

www.root19.com +91 - 9969 353 391

(ii) Discuss factors, other than dosage, that should be considered to prevent the insecticide damaging the environment.

.....

.....

.....

.....

.....

.....

..... [3]

(b) **(i)** Describe the advantages to farmers of using insecticides.

.....

.....

.....

.....

..... [2]

(ii) Farmers also use other chemicals on their crop plants.

State the names of chemicals, other than insecticides, that are used by farmers on crop plants **and** explain their benefits.

.....

.....

.....

.....

.....

.....

..... [3]

www.root19.com +91 - 9969 353 301

(c) Insecticides are often made from chemicals that occur naturally in plants. Tobacco plants are one example of this.

(i) Suggest why having a natural insecticide is an adaptive feature of plants.

.....

.....

..... [1]

(ii) Describe why people find it difficult to stop smoking tobacco.

.....

.....

.....

.....

..... [2]

(iii) State the names of **two** diseases that can be caused by smoking tobacco.

1 .....

2 .....
[2]

(iv) State the name of the component of tobacco that can damage alveoli.

..... [1]

[Total: 17]

Permission to reproduce items where third-party owned material protected by copyright is included has been sought and cleared where possible. Every reasonable effort has been made by the publisher (UCLES) to trace copyright holders, but if any items requiring clearance have unwittingly been included, the publisher will be pleased to make amends at the earliest possible opportunity.

To avoid the issue of disclosure of answer-related information to candidates, all copyright acknowledgements are reproduced online in the Cambridge Assessment International Education Copyright Acknowledgements Booklet. This is produced for each series of examinations and is freely available to download at www.cambridgeinternational.org after the live examination series.

Cambridge Assessment International Education is part of the Cambridge Assessment Group. Cambridge Assessment is the brand name of the University of Cambridge Local Examinations Syndicate (UCLES), which itself is a department of the University of Cambridge.

www.root19.com +91 - 9969 353 391